This drawing and all informations contained here can not be used or reproduced, integrally or partially, without written authorization by CS Srl.

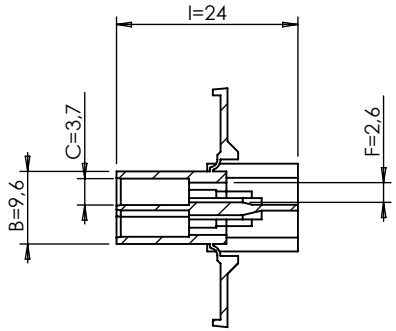

SEZIONE B-B

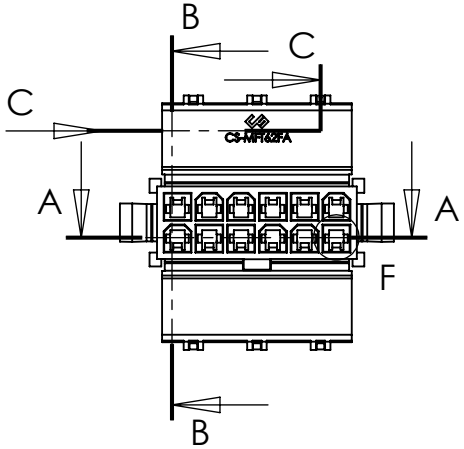

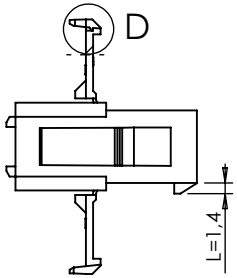

SEZIONE C-C

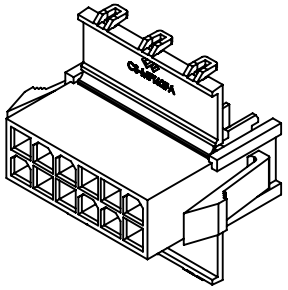

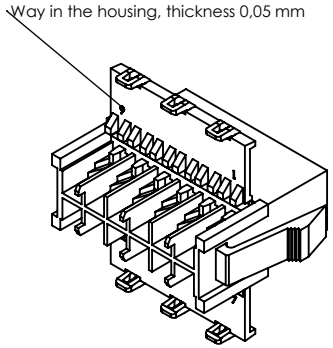

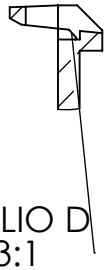

DETTAGLIO D
SCALA 3:1

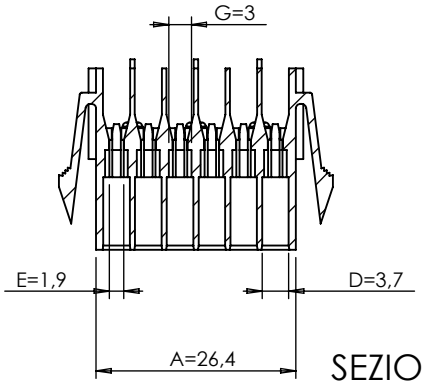

SEZIONE A-A

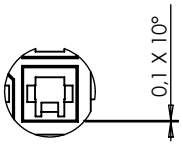

DETTAGLIO F
SCALA 2 : 1

INDEX	MODIFICATION	DATE

CS S.r.l.
20063 CERNUSCO S/N - VIA COMO, 11
TEL +39.02.9210.7404 - FAX +39.02.9210.0217
http://www.csconnectors.com - e-mail: info@csconnectors.com

CHECKED BY	DATE	DESIGN UNITS
Stefano Galimberti	18-11-2013	METRIC
DRAWN BY	DATE	WEIGHT
Stefano Querzoli	18-11-2013	

DIMENSIONS WITHOUT TOLERANCES		
∢ ±2°	0 - 6	±0.1
	6 - 30	±0.2
	> 30	±0.3

PART NUMBER	MATERIAL
CS-MFT62FA	PA66 UL94 V-2
CS-MFT62FAV0	PA6/66 UL94 V-0
CS-MFT62FAV0750NF	PA66 UL94 V-0 GWIT 775
CS-MFT62FA-G	PA6 UL94 V-2 GWIT 775

SCALE	CAD REFER	SIZE	INDEX 0
1:1	Y:\dis\cs\mft\mftxxf\mftxxfa sec lock\tavole\sw\	A4	18-11-2013

BASE CODE	DESCRIPTION
CS-MFT62FA	MFT FEMALE CONNECTOR FOR PANEL, 6X2 POLES